AQA

Please write clearly in block capitals.

Centre number | | | | | | Candidate number | | | | |

Surname _____

Forename(s) _____

Candidate signature _____
I declare this is my own work.

GCSE
ENGINEERING

Unit 1 Written Paper

Time allowed: 2 hours

Materials
For this paper you must have:
- normal writing and drawing instruments
- a calculator.

Instructions
- Use black ink or black ball-point pen. Use pencil only for drawing.
- Fill in the boxes at the top of this page.
- Answer **all** questions.
- You must answer the questions in the spaces provided. Do not write outside the box around each page or on blank pages.
- If you need extra space for your answer(s), use the lined pages at the end of this book. Write the question number against your answer(s).
- Some questions will require you to shade a circle. If you make a mistake cross through the incorrect answer.
- Do all rough work in this book. Cross through any work you do not want to be marked.

For Examiner's Use	
Question	Mark
1	
2	
3	
4	
5	
6	
7	
8	
9	
TOTAL	

Information
- The marks for questions are shown in brackets.
- The maximum mark for this paper is 120.
- You are reminded of the need for good English and clear presentation in your answers.

Do not write outside the box

Answer **all** questions in the spaces provided.

For each question completely fill in the circle alongside the appropriate answer.

CORRECT METHOD ⬬ WRONG METHODS

If you want to change your answer you must cross out your original answer as shown.

If you wish to return to an answer previously crossed out, ring the answer you now wish to select as shown.

0 1 . 1 Which of the following describes an alloy?

[1 mark]

A A liquid metal ⬭

B A mixture including metallic materials ⬭

C A mixture of non-metallic materials ⬭

D A pure metal ⬭

0 1 . 2 Which heat treatment process for steel involves heating to high temperatures then cooling rapidly in water?

[1 mark]

A Annealing ⬭

B Galvanising ⬭

C Hardening ⬭

D Normalising ⬭

Do not write outside the box

0 1 . 3 Which of the following is a thermosetting polymer?

[1 mark]

A Acrylic ⬭

B Nylon ⬭

C Polypropylene ⬭

D Polyurethane ⬭

0 1 . 4 Which of the following is a pushing force that moves an object forwards through the air?

[1 mark]

A Drag ⬭

B Friction ⬭

C Lift ⬭

D Thrust ⬭

0 1 . 5 Which one of the following properties allows a material to resist bending?

[1 mark]

A Brittleness ⬭

B Hardness ⬭

C Stiffness ⬭

D Toughness ⬭

Do not write outside the box

0 1 . 6 Which of the following is an output component?

[1 mark]

A Light dependent resistor ⬭

B Light emitting diode ⬭

C Thermistor ⬭

D Timer ⬭

0 1 . 7 Name the component shown in **Figure 1**.

[1 mark]

Figure 1

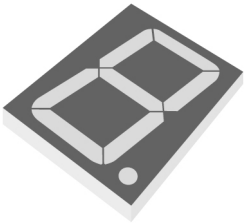

A Capacitor ⬭

B Microcontroller ⬭

C 7 Segment Display ⬭

D Transistor ⬭

Do not write outside the box

0 1 . 8 Complete the following statements using the word bank provided.

Composites are materials made by _____ two or more different materials.

They can have _____ that are not possible with individual materials.

A disadvantage of composites is that they are difficult to separate and cannot be easily _____ .

Word bank

colours, combining, joined, layering, properties, recycled, shaping, substituted, textures

[3 marks]

10

Turn over for the next question

Do not write outside the box

0 2 . 1 Stainless steel pans are shown in **Figure 2**.

Figure 2

Give **three** reasons why stainless steel is a suitable material for the pans.

[3 marks]

Reason 1 _____

_____

Reason 2 _____

_____

Reason 3 _____

_____

Do not write outside the box

0 2 . 2 Use notes and sketches to explain how two metal parts can be fastened together using riveting.

[4 marks]

Do not write outside the box

0 2 . 3 A drilling machine is shown in **Figure 3**.

Figure 3

Evaluate **two** risks of using this machine.

[4 marks]

Do not write outside the box

0 2 . 4 Inside the drilling machine there is a simple gear train.

The driver gear has 85 teeth and the driven gear has 152 teeth.

Calculate the gear ratio.

Show your working.

Give your answer to **two** decimal places.

[3 marks]

Answer _____

0 2 . 5 The speed of the drilling machine motor is 1430 rpm.

Calculate the output speed.

Show your working.

Formula:

$$\frac{\text{Speed driver gear}}{\text{Speed driven gear}} = \frac{\text{Number of teeth on driven gear}}{\text{Number of teeth on driver gear}}$$

[2 marks]

Answer _____ rpm

Do not write outside the box

0 2 . 6 Identify **one** difference between drilling using a pillar drill and drilling using a lathe.

[2 marks]

_____

_____

_____

_____

0 2 . 7 **Figure 4** shows a block of material.

Figure 4

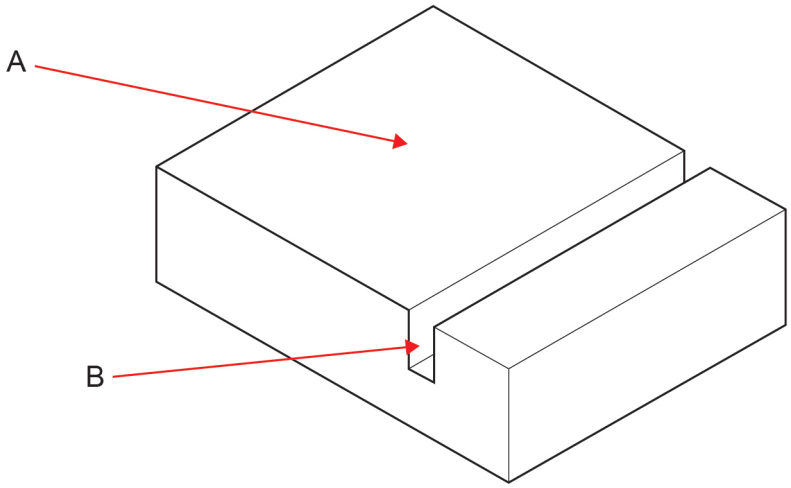

Name the machining processes used to create the flat surface shown at A and the groove shown at B.

[2 marks]

Flat surface A process _____

Groove B process _____

20

Do not write outside the box

0 3 Two bridges made from different materials are shown in **Figure 5** and **Figure 6**.

Figure 5

Structural concrete

Figure 6

Structural timber

Analyse the suitability of the **two** materials for constructing a bridge in terms of the following:

[6 marks]

Properties _____

_____

_____

_____

Advantages _____

_____

_____

_____

Disadvantages _____

_____

_____

_____

6

Turn over ►

Do not write outside the box

0 4 . 1 **Figure 7** shows a greenhouse manufactured using standard forms of material.

Figure 7

The manufacturer is considering offering different sizes of greenhouse.

Analyse the manufacturing and cost implications of using standard forms compared to specially made.

[4 marks]

Do not write outside the box

0 4 . 2 **Table 1** shows material costs for a greenhouse.

Table 1

Material	Cost	Quantity
Aluminium frame	£1.72 per m	47
Polycarbonate panels	£3.06 per panel	32
Fastenings	£7.75 per pack	1

The greenhouse requires 1.5 hours of manufacturing time at £30 per hour.

Calculate the total cost of manufacturing the greenhouse.

Show your working.

[4 marks]

Answer £ _____

0 4 . 3 The manufacturer estimates that the total cost of the greenhouse would be 37% higher if made from toughened glass panels.

Calculate the **total cost** of the greenhouse if toughened glass panels were used.

Show your working.

[2 marks]

Answer £ _____

Turn over ►

Do not write outside the box

0 4 . 4 Other than cost, evaluate which other factors engineers need to consider when selecting materials.

Give examples in your answer.

[6 marks]

Do not write outside the box

0 4 . 5 Name a suitable production process for shaping polystyrene.

Explain why that process is suitable.

[3 marks]

Process _____

Explanation _____

_____

_____

_____

0 4 . 6 Explain the advantages of Fibre Reinforced Polymers (FRP).

[2 marks]

_____

_____

_____

_____

21

Turn over for the next question

Do not write outside the box

0 5 A lathe is shown in **Figure 8**.

Figure 8

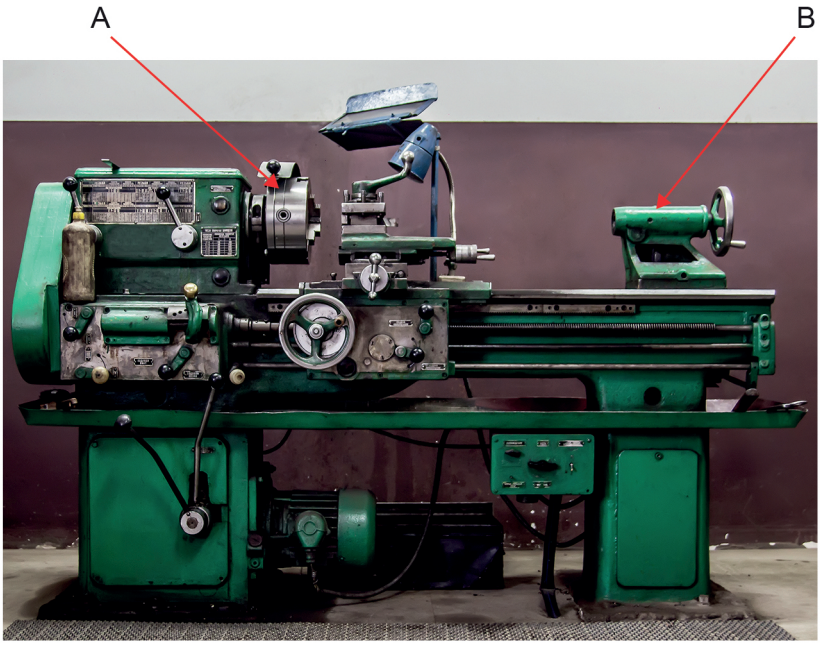

0 5 . 1 Identify the parts of the lathe at A and B.

[2 marks]

Part A _____

Part B _____

0 5 . 2 **Figure 9** shows a tool used on the lathe.

Figure 9

Name the tool in **Figure 9** and explain what it is used for.

[2 marks]

Tool name _____

Used for _____

_____

Do not write outside the box

0 5 . 3 A metal part will be taper turned.

Calculate the angle of the taper shown as θ on **Figure 10**.

Show your working.

[3 marks]

Figure 10

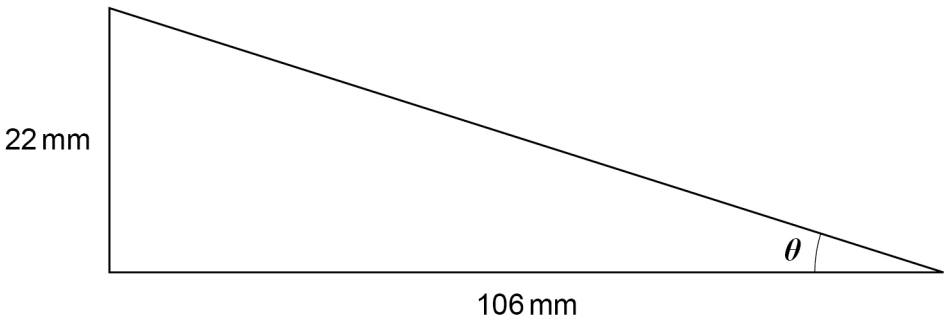

Answer _____ degrees

Question 5 continues on the next page

Do not write outside the box

0 5 . 4 An aluminium coat hook is shown in **Figure 11**.

Figure 11

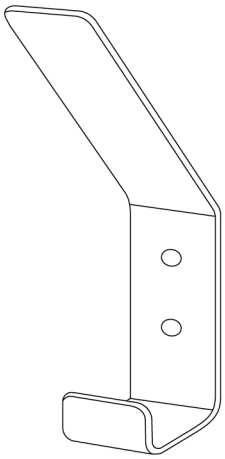

Complete the table to create a production plan to manufacture the coat hook.

Some parts have been completed for you.

[6 marks]

Order	Process	Hand tools	Description of process
1	Mark out the coat hook shape.	Scriber, steel rule	Mark out the size of the coat hook and the position of the holes with a steel ruler and a scriber.
2	Cut out the shape.		
3	Make the holes.	Centre punch, drill	Centre punch the position of the holes. Clamp the work piece and drill through the material.
4	Refine the edges and holes.		
5	Bend to correct angle.		

Do not write outside the box

0 5 . 5 A fixing hole in the coat hook is changed to the shape shown in **Figure 12**.

Figure 12

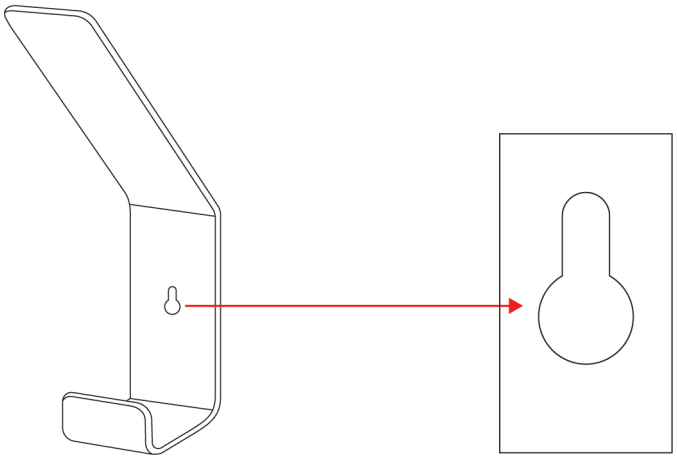

Name **two** machining processes that could be used to cut out the fixing hole shape.

[2 marks]

Process 1 _____

Process 2 _____

15

Turn over for the next question

Do not write outside the box

0 6 . 1 A sine wave is shown in **Figure 13**.

Figure 13

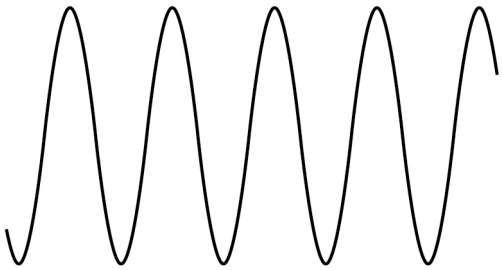

Does the sine wave represent an analogue or digital signal?

[1 mark]

_____

0 6 . 2 Name **one** benefit of using a piezo sounder rather than a buzzer in a circuit.

[1 mark]

_____

_____

0 6 . 3 Describe how an engineer would predict performance in an electronic circuit.

[2 marks]

_____

_____

_____

_____

Do not write outside the box

0 6 . 4 A circuit for a light emitting diode (LED) contains a 250 Ω resistor and the voltage is 6 V.

Calculate the current flowing through the circuit.

Use the formula $V = I \times R$

Give your answer to **three** decimal places.

[4 marks]

Answer with unit _____

0 6 . 5 Explain why a resistor is required in the LED circuit.

[2 marks]

0 6 . 6 Give **one** example of when an Analogue to Digital Conversion (ADC) is used.

[2 marks]

Do not write outside the box

0 6 . 7 A system is designed to operate a motorised window blind.

The system consists of a motor, light sensor, a microcontroller and a Field Effect Transistor (FET).

In the space below, draw a systems diagram to show the operation of the motorised window blind.

[6 marks]

0 6 . 8 Analyse the use of a motorised window blind system rather than a manually operated one.

[2 marks]

_____

_____

_____

_____

20

Do not write outside the box

0 7 . 1 Name **one** non-renewable form of energy production.

[1 mark]

0 7 . 2 Tidal energy and wind energy are two methods of renewable energy production.

Compare the use of the two energy methods.

Discuss the following aspects in your answer:

- advantages and disadvantages
- impact on the environment.

[8 marks]

9

Do not write outside the box

0 8 . 1 **Figure 14** shows a brake lever and cable.

Figure 14

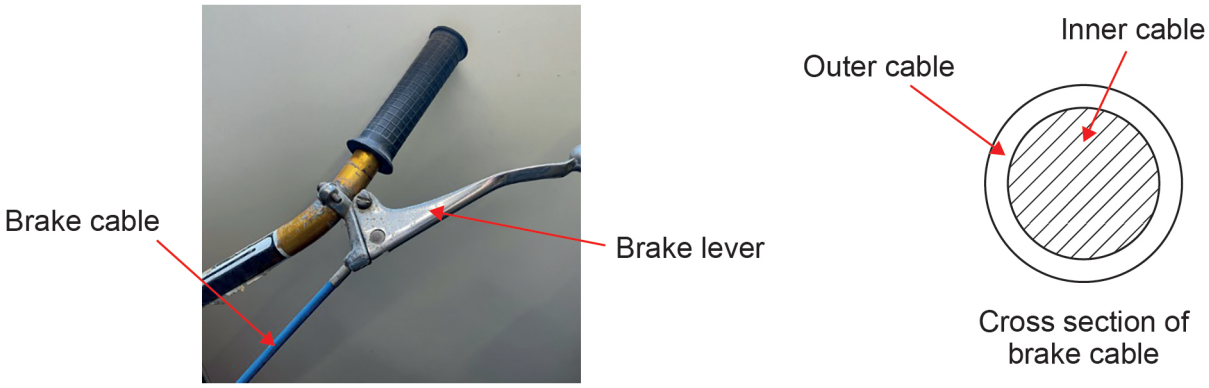

The inner cable has a diameter of 1.6 mm. The force applied by the lever is 70 N.

Calculate the stress applied to the inner cable when the lever is pulled.

Formula: Stress = Force/Cross section area

Cross section area = πr^2

[3 marks]

Answer _____ N/mm^2

0 8 . 2 State which force is applied to the inner cable when the brake lever is pulled.

[1 mark]

Do not write outside the box

0 8 . 3 The manufacturer must test the inner cable to determine how much it stretches.

Using notes and sketches, design a test that would assess this property of the inner cable.

[6 marks]

Question 8 continues on the next page

Do not write outside the box

0 8 . 4 **Table 2** shows the results of testing when increasing force is applied to the inner cable.

Table 2

Force in N	20	40	60	80	100	120
Length in mm	1650	1652	1655	1659	1664	1670

Using the data in **Table 2**, plot a graph to show the relationship between the force applied and the change in length.

Marks will be awarded for:

- labelling the axes
- plotting the data onto the graph
- drawing a line to connect the plotted data.

[4 marks]

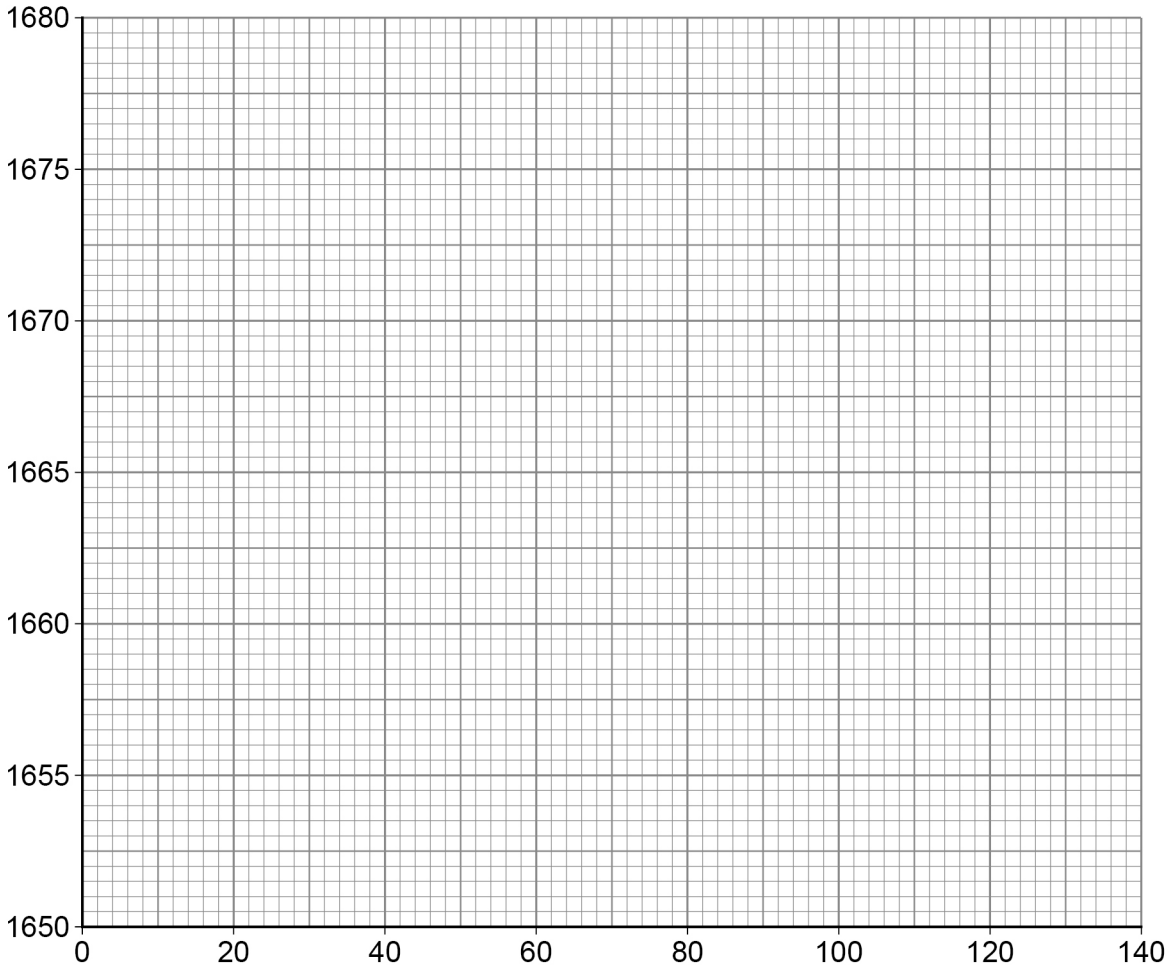

Do not write outside the box

0 8 . 5 Predict the length of the inner cable if a force of 110 N is applied.

[1 mark]

Answer _____ mm

0 8 . 6 State the material property that allows the inner cable to stretch when a force is applied.

[1 mark]

_____

_____

16

0 9 . 1 Name **one** example of a rapid prototyping process.

[1 mark]

_____

_____

0 9 . 2 Give **two** advantages of using a rapid prototyping process.

[2 marks]

Advantage 1 _____

_____

Advantage 2 _____

_____

3

END OF QUESTIONS

Do not write outside the box

There are no questions printed on this page

DO NOT WRITE ON THIS PAGE
ANSWER IN THE SPACES PROVIDED

Do not write outside the box

Question number	**Additional page, if required.** **Write the question numbers in the left-hand margin.**

Do not write outside the box

Question number	**Additional page, if required.** **Write the question numbers in the left-hand margin.**

Do not write outside the box

Question number	**Additional page, if required.** **Write the question numbers in the left-hand margin.**

Do not write outside the box

There are no questions printed on this page

DO NOT WRITE ON THIS PAGE
ANSWER IN THE SPACES PROVIDED

Copyright information

For confidentiality purposes, all acknowledgements of third-party copyright material are published in a separate booklet. This booklet is published after each live examination series and is available for free download from www.aqa.org.uk.

Permission to reproduce all copyright material has been applied for. In some cases, efforts to contact copyright-holders may have been unsuccessful and AQA will be happy to rectify any omissions of acknowledgements. If you have any queries please contact the Copyright Team.

Copyright © 2022 AQA and its licensors. All rights reserved.